Published: 11-May-2011

Front End Sheet Metal Repairs -

Torque Specifications

Description	Nm	lb-ft
Air deflector bolts	10	7
Hood latch Torx bolts	10	7
Hood panel bolts	25	18
Coolant expansion tank bolts	10	7

mcx30.com

Published: 11-May-2011

Front End Sheet Metal Repairs - Front End Sheet Metal

Description and Operation

Front end service panels

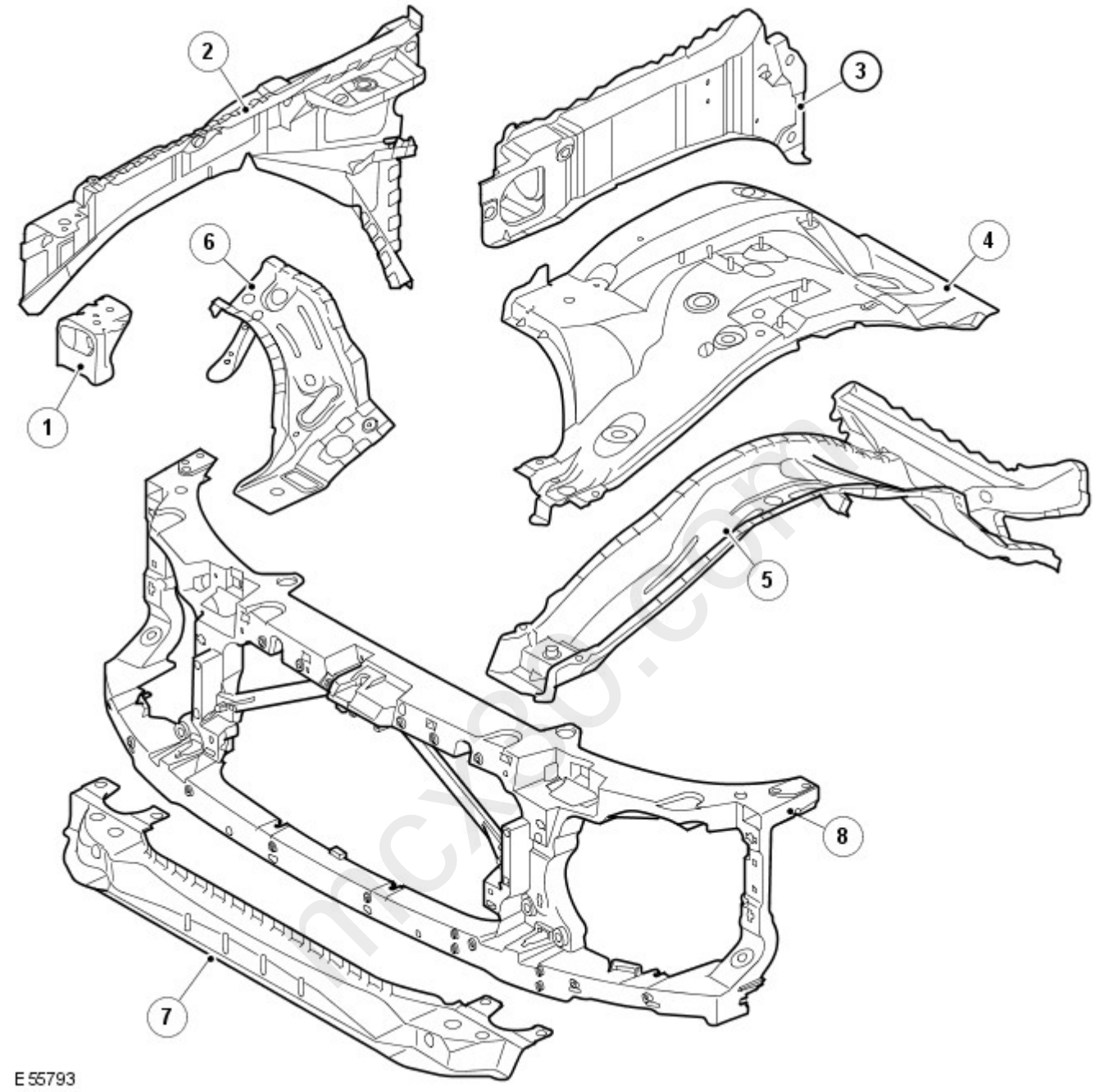

Item	Description	Service part No
1	Fender apron panel closing.	R/H ABD780100 L/H ABD780110
2	Fender apron panel reinforcement.	R/H ABD780140 L/H ABD780150
3	Fender apron panel.	R/H ABD780220 L/H ABD780230
4	Front wheelhouse.	R/H ANJ780040 L/H ANJ780050
5	Front side member.	R/H AB1780040 L/H AB1780050
6	Front wheelhouse reinforcement.	R/H AWW780020 L/H AWW780030
7	Front crossmember.	ABC780060
8	Hood latch panel.	DIN500020

Time sechedules, front end

The following information shows the total time taken to replace single panels and complete assembilies. This time

includes removal of Mechanical, Electrical and Trim (MET) items, plus paint times based on Metalic Clear Over Base Paint.

The times shown were generated by Thatcham (the motor insurance repair and research centre) and are to be used as a guide only.

Single panel times

Panel Description	Petrol	Diesel
Hood	7.8	7.8
Hood latch panel	2.7	2.7
Front fender L/H	7.5	7.5
Front Fender R/H	7.5	7.5
Front Crossmember	6.0	6.0

Combination panel replacement times

The following panel combination times show the total time to remove/refit body panels, MET items and any paint process.

Combination panel times

Panel Description	Petrol	Diesel
Hood		
Front bumper		
Hood latch panel		
Front crossmember		
Front grille		
Front fender		
Total Time	**17.6**	**17.6**

Combination panel times

Panel Description	Petrol	Diesel
Hood		
Front bumper		
Hood latch panel		
Front crossmember		
Front grille		
Front fender L/H and R/H		
Total Time	**18.1**	**18.1**

Combination panel times

Panel Description	Petrol	Diesel
Body off integrated frame		
Hood		
Front bumper		
Hood latch panel		
Front side member		
Fender apron panel		
Fender apron panel reinforcement		
Front wheelhouse		
Front crossmember		
Front grille		
Front fender L/H and R/H		
Total Time	**L/H 39.2 R/H 39.1**	**L/H 39.6 R/H 39.4**

Combination panel times

Panel Description	Petrol	Diesel
Body off integrated frame		
Hood		
Front bumper		
Hood latch panel		
Front side member L/H and R/H		
Fender apron panel L/H and R/H		
Fender apron panel reinforcement L/H and R/H		
Front wheelhouse L/H and R/H		
Front crossmember		
Front grille		
Front fender L/H and R/H		
Total Time	**48.8**	**49.2**

mcx30.com

Published: 11-May-2011

Front End Sheet Metal Repairs - Hood Latch Panel

Removal and Installation

Removal

• NOTE: If the hood latch panel coating is damaged or scratched, it must be repaired using the approved coating. For additional information, refer to: Specifications (501-27 Front End Sheet Metal Repairs, Specifications).

1. Disconnect the battery ground cable.
   For additional information, refer to: Specifications (414-00 Battery and Charging System - General Information, Specifications).
2. Remove the front bumper.
   For additional information, refer to: Front Bumper (501-19, Removal and Installation).
3. Release the power steering fluid reservoir and position aside.
   - Release the clip.

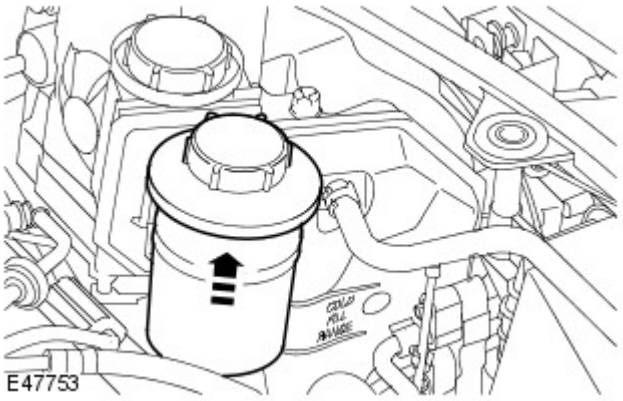

4. Release the washer reservoir filler neck from the coolant tank clip.
5. Remove the 2 coolant expansion tank mounting bolts.
6. Release the coolant expansion tank.
   - Lift coolant expansion tank vertically.

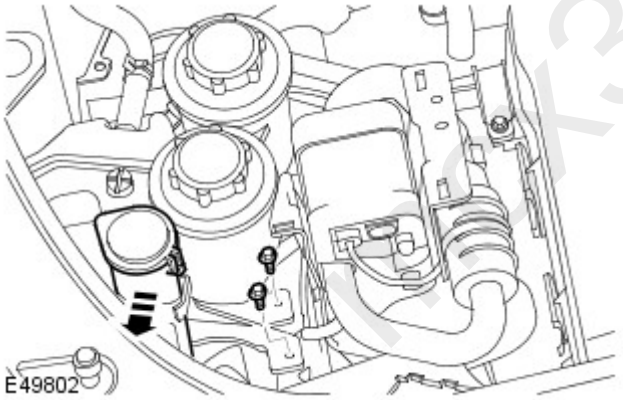

7. Remove the radiator securing pegs.

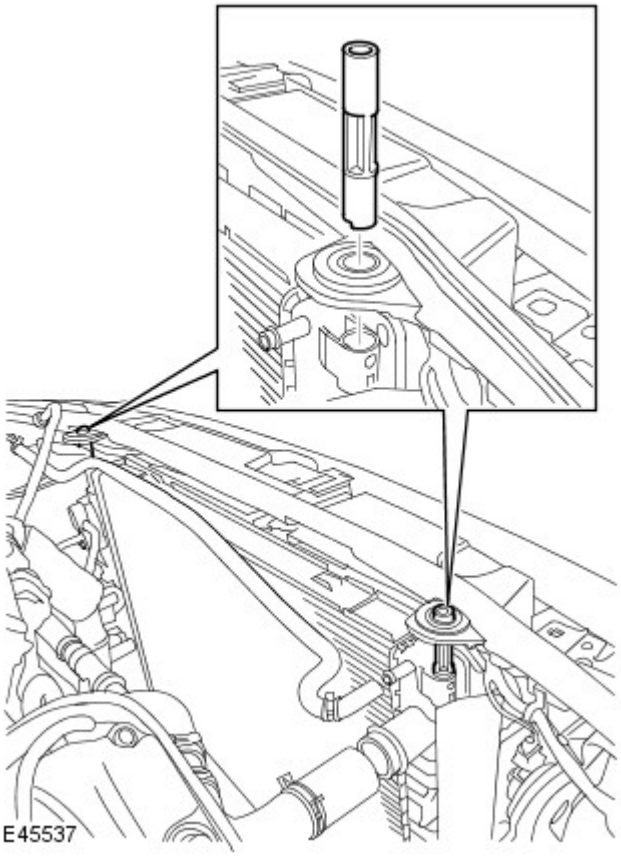

8. Disconnect the hood release cable from the connecting box.

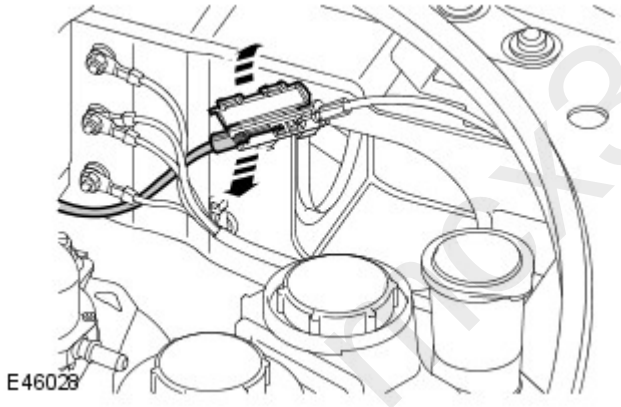

mx30.com

9. NOTE: Note the fitted position.

Release the wiring harness.

- Disconnect the 3 electrical connectors.
- Release the 9 clips.
- Release the grommet.
- Carefully tie the harness aside.

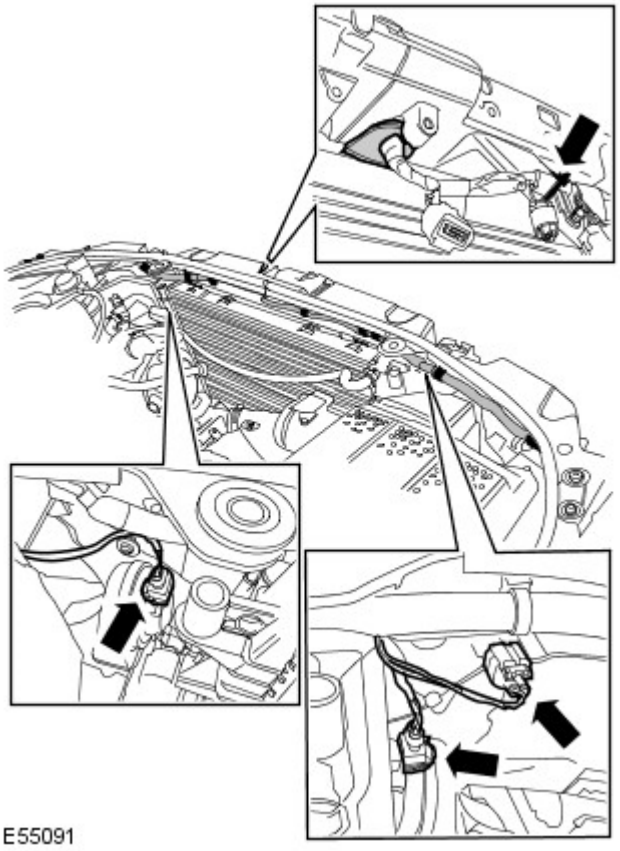

E55091

10. Remove the panel upper fixings.

- Remove the 4 Torx bolts.

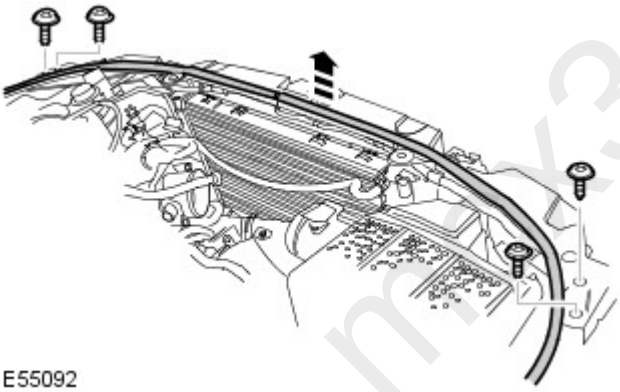

E55092

11. Remove the panel lower fixings.

- Remove the 6 Torx bolts.

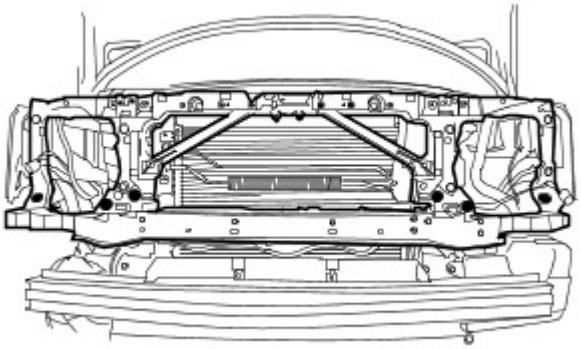

E55093

12. NOTE: Note the fitted position.

With assistance, remove the hood latch panel.

mx30.com

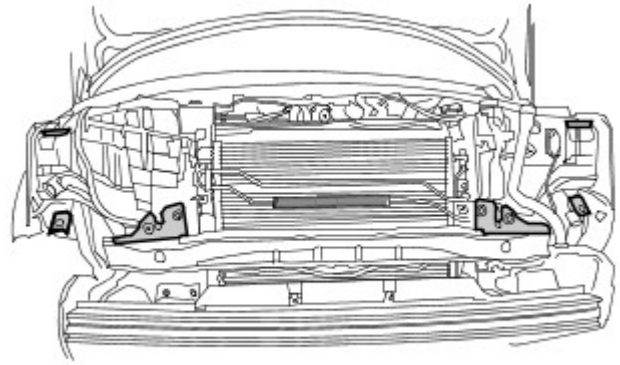

E55094

13. Noting the fitted position, remove the 6 spacers.

- Remove the 2 clips.

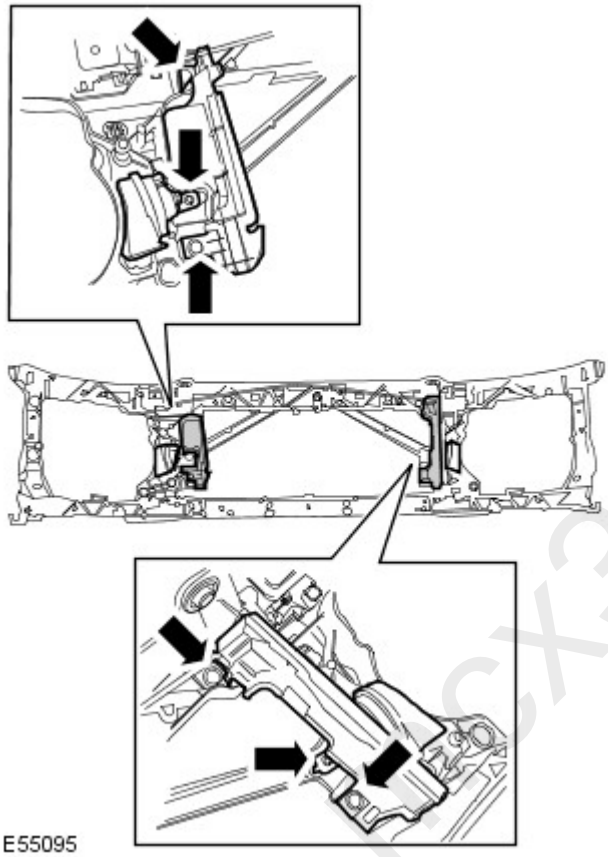

E55095

14. NOTE: Do not disassemble further if the component is removed for access only.

Remove the 2 horn assemblies.

- Remove the 2 air deflectors.
- Remove the 2 Torx bolts.

15. Remove the hood switch.

- Remove the 2 Torx bolts.
- Release the 2 clips.

16. Remove the RH hood latch.

- Release and remove the cable.

fcx30.com

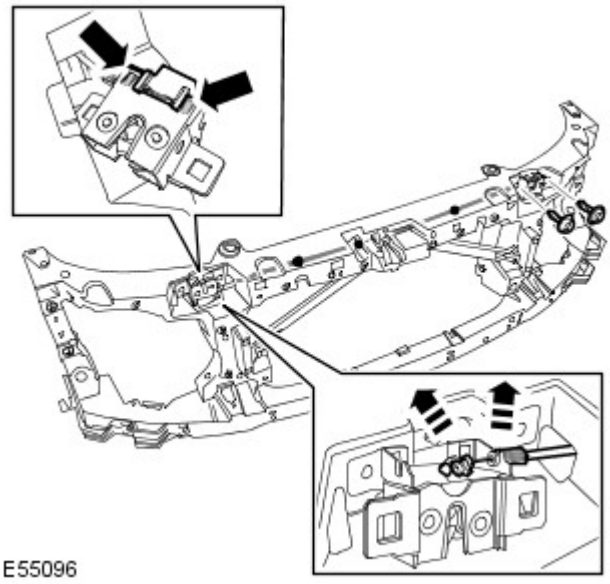

17. Remove the LH hood latch.

- Remove the 2 Torx bolts.

Installation

1. Install the horn assemblies.

- Install the air deflectors.
- Install the bolts and tighten to 10 Nm (7 lb.ft).

2. Install the LH hood latch.

- Tighten the Torx bolts to 10 Nm (7 lb.ft).

3. Install the RH hood latch.

- Attach the hood release cable.
- Install the hood switch.
- Tighten the Torx bolts to 10 Nm (7 lb.ft).

4. Install the spacers.

- Install the clips.

5. NOTE: Align to the position noted on removal.

With assistance, install the hood latch panel.

6. Install the panel fixings.

- Install and tighten the bolts to 25 Nm (18 lb.ft).

7. NOTE: Align to the position noted on removal.

Install the wiring harness.

- Connect and secure the electrical connector.
- Carefully secure the clips.

8. Connect the hood release cable.

9. Install the radiator securing pegs.

10. Install the coolant expansion tank.

- Position the coolant expansion tank, locate the spigot and lug.
- Install the bolts and tighten to 10 Nm (7 lb.ft).

11. Install the windshield washer reservoir filler neck.

- Locate in clip.

12. Install the power steering fluid reservoir.

mcx30.com

- Position and secure to mounting bracket.

13. Install the front bumper.
For additional information, refer to: Front Bumper (501-19, Removal and Installation).

14. Open and close the hood to check the hood latch operation.

15. Adjust both of the hood latches.

- Loosen the 4 hood latch Torx bolts.
- Lower the hood and check for alignment.
- Open the hood and tighten the Torx bolts to 10 Nm (7 lb.ft).
- Check for the correct operation of the hood safety catch.
- If necessary, repeat the above adjustment procedure.

16. Connect the battery ground cable.
For additional information, refer to: Specifications (414-00 Battery and Charging System - General Information, Specifications).

mcx30.com

Published: 11-May-2011

Front End Sheet Metal Repairs - Front Crossmember

Removal and Installation

Removal

1. Disconnect both battery cables.
   For additional information, refer to: Specifications (414-00 Battery and Charging System - General Information, Specifications).
2. Remove the hood latch panel.
   For additional information, refer to: Hood Latch Panel (501-27 Front End Sheet Metal Repairs, Removal and Installation).
3. Remove the radiator.
   For additional information, refer to: Radiator (303-03A Engine Cooling - TDV6 2.7L Diesel, Removal and Installation).
4. Remove both front impact sensors.
   For additional information, refer to: Front Impact Severity Sensor (501-20B Supplemental Restraint System, Removal and Installation).
5. Release wiring harness from crossmember
6. Remove the fender moulding.
   For additional information, refer to: Front Fender Moulding (501-08 Exterior Trim and Ornamentation, Removal and Installation).
7.

Item	Part Number	Description
1	-	8 spot welds.
2	-	8 spot welds.

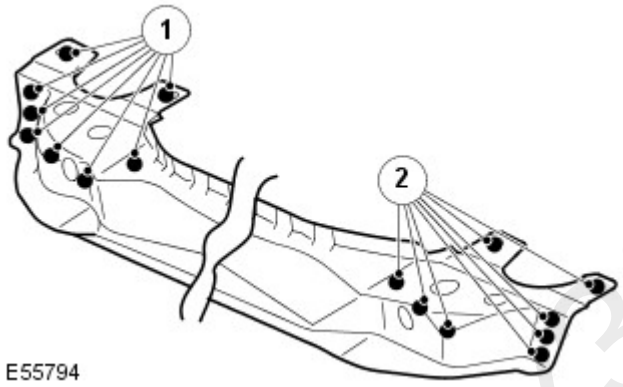

8. For additional information:
   - Welding.
     For additional information, refer to: Body Repairs (501-25A Body Repairs - General Information, Description and Operation).
   - Corrosion protection.
     For additional information, refer to: Corrosion Protection (501-25B Body Repairs - Corrosion Protection, Description and Operation).
   - Tolerance checks.
     For additional information, refer to: Body and Frame (501-26 Body Repairs - Vehicle Specific Information and Tolerance Checks, Description and Operation).

Installation

1. Install is the reversal of removal.

mcx30.com

Published: 11-May-2011

Front End Sheet Metal Repairs - Front Side Member

Removal and Installation

Removal

• NOTE: This procedure requires the body to be removed from the integrated body frame.

• NOTE: In this procedure the front side member is replaced in cojunction with hood latch panel, front wheelhouse and the front crossmember.

1. Load vehicle onto ramp.

2. Disconnect both the battery cables.
For additional information, refer to: Specifications (414-00 Battery and Charging System - General Information, Specifications).

3. L/H side: Remove the battery.

4. Remove the front fender.
For additional information, refer to: Fender (501-02 Front End Body Panels, Removal and Installation).

5. Remove the hood latch panel.
For additional information, refer to: Hood Latch Panel (501-27 Front End Sheet Metal Repairs, Removal and Installation).

6. Remove the front crossmember.
For additional information, refer to: Front Crossmember (501-27 Front End Sheet Metal Repairs, Removal and Installation).

7. Remove the front wheelhouse.
For additional information, refer to: Front Wheelhouse (501-27 Front End Sheet Metal Repairs, Removal and Installation).

8. Remove the hood.

9. Remove both hood support struts.

10. Remove the hood wiring harness.

11. Remove the plenum chamber panel.
For additional information, refer to: Plenum Chamber (412-01 Air Distribution and Filtering, Removal and Installation).

12. Remove both wiper arms and blades.

13. L/H side: Remove the power steering fluid reservoir.
For additional information, refer to: Power Steering Fluid Reservoir - TDV6 2.7L Diesel (211-02 Power Steering, Removal and Installation).

14. Remove the instrument panel.
For additional information, refer to: Instrument Panel - 2.7L Diesel (501-12 Instrument Panel and Console, Removal and Installation).

15. Remove the insulation from outer and inner bulkhead.

16. R/H side: Release the ABS modulator.

17. R/H side: Remove the accelerator pedal.
For additional information, refer to: Accelerator Pedal (310-02A Acceleration Control - TDV6 2.7L Diesel, Removal and Installation).

18. L/H side: Remove the battery junction box.
For additional information, refer to: Battery Junction Box (BJB) - TDV6 2.7L Diesel (418-00 Module Communications Network, Removal and Installation).

19. Release the wiring harness from bulkhead.

20. Release the wiring harness from fender apron panel reinforcement.

21. Release the wiring harness from the side member.

22. L/H side: Remove the fuel fired booster heater.
For additional information, refer to: Fuel Fired Booster Heater (412-02B Auxiliary Heating, Removal and Installation).

23. Remove the scuff plate trim panel trim
For additional information, refer to: Scuff Plate Trim Panel (501-05 Interior Trim and Ornamentation, Removal and Installation).

24. Remove the footrest

25. Remove the cowl side trim panel.
For additional information, refer to: Cowl Side Trim Panel (501-05 Interior Trim and Ornamentation, Removal and Installation).

mcx30.com

26. Release the front carpet.

27.

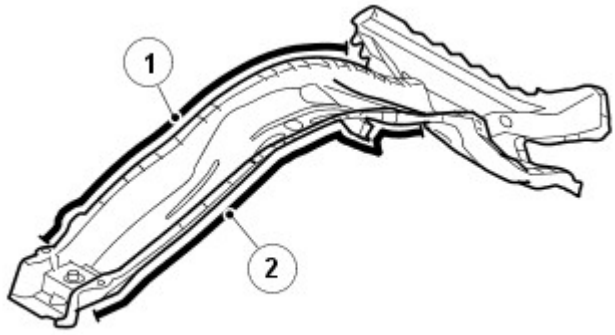

E55830

Item	Part Number	Description
1	-	18 spot welds.
2	-	16 spot welds.

28.

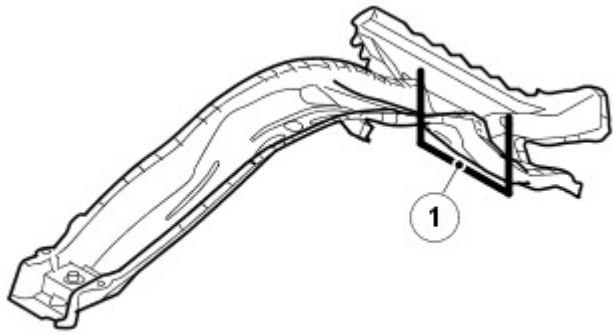

E56906

Item	Part Number	Description
1	-	6 plug welds and a butt weld.

29. For additional information:

- Welding.
  For additional information, refer to: Body Repairs (501-25A Body Repairs - General Information, Description and Operation).
- Corrosion protection.
  For additional information, refer to: Corrosion Protection (501-25B Body Repairs - Corrosion Protection, Description and Operation).
- Tolerance checks.
  For additional information, refer to: Body and Frame (501-26 Body Repairs - Vehicle Specific Information and Tolerance Checks, Description and Operation).

Installation

1. Install is the reversal of removal.

mcx30.com

Published: 11-May-2011

Front End Sheet Metal Repairs - Front Side Member Section

Removal and Installation

Removal

• NOTE: This procedure requires the body to be removed from the integrated body frame.

• NOTE: In this procedure the front side member section is replaced in conjunction with hood latch panel, front wheelhouse and the front crossmember.

1. Load vehicle onto ramp.

2. Disconnect both the battery cables.
For additional information, refer to: Specifications (414-00 Battery and Charging System - General Information, Specifications).

3. L/H side: Remove the battery.

4. Remove the front fender.
For additional information, refer to: Fender (501-02 Front End Body Panels, Removal and Installation).

5. Remove the hood latch panel.
For additional information, refer to: Hood Latch Panel (501-27 Front End Sheet Metal Repairs, Removal and Installation).

6. Remove the front wheelhouse.
For additional information, refer to: Front Wheelhouse (501-27 Front End Sheet Metal Repairs, Removal and Installation).

7. Remove the front crossmember.
For additional information, refer to: Front Crossmember (501-27 Front End Sheet Metal Repairs, Removal and Installation).

8. Remove the hood.

9. Remove both hood support struts.

10. Remove the hood wiring harness.

11. Remove the plenum chamber panel.
For additional information, refer to: Plenum Chamber (412-01 Air Distribution and Filtering, Removal and Installation).

12. L/H side: Remove the power steering fluid reservoir.
For additional information, refer to: Power Steering Fluid Cooler - TDV6 2.7L Diesel (211-02 Power Steering, Removal and Installation).

13. Remove the instrument panel.
For additional information, refer to: Instrument Panel - 2.7L Diesel (501-12 Instrument Panel and Console, Removal and Installation).

14. Remove the insulation from outer and inner bulkhead.

15. R/H side: Release the ABS modulator.

16. R/H side: Remove the accelerator pedal.
For additional information, refer to: Accelerator Pedal (310-02A Acceleration Control - TDV6 2.7L Diesel, Removal and Installation).

17. L/H side: Remove the battery junction box.
For additional information, refer to: Battery Junction Box (BJB) - TDV6 2.7L Diesel (418-00 Module Communications Network, Removal and Installation).

18. Release the wiring Harness from bulkhead.

19. Release the wiring harness from fender apron panel reinforcement.

20. Release the wiring harness from the side member.

21. L/H side: Remove the fuel fired booster heater.
For additional information, refer to: Fuel Fired Booster Heater (412-02B Auxiliary Heating, Removal and Installation).

22. Remove the scuff plate trim panel trim
For additional information, refer to: Scuff Plate Trim Panel (501-05 Interior Trim and Ornamentation, Removal and Installation).

23. Remove the footrest

24. Remove the cowl side trim panel.
For additional information, refer to: Cowl Side Trim Panel (501-05 Interior Trim and Ornamentation, Removal and Installation).

25. Release the front carpet.

mcx30.com

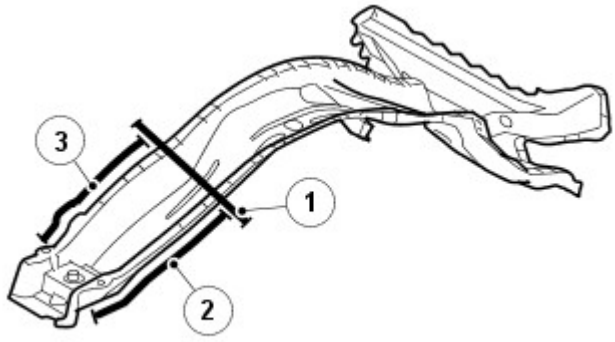

E55831

26.

Item	Part Number	Description
1	-	Butt weld
2	-	7 spot welds.
3	-	8 spot welds.

27. For additional information:

- Welding.
  For additional information, refer to: Body Repairs (501-25A Body Repairs - General Information, Description and Operation).
- Corrosion protection.
  For additional information, refer to: Corrosion Protection (501-25B Body Repairs - Corrosion Protection, Description and Operation).
- Tolerance checks.
  For additional information, refer to: Body and Frame (501-26 Body Repairs - Vehicle Specific Information and Tolerance Checks, Description and Operation).

Installation

1. Install is the reversal of removal.

mcx30.com

Published: 11-May-2011

Front End Sheet Metal Repairs - Fender Apron Panel Reinforcement

Removal and Installation

Removal

• NOTE: In this procedure the fender apron panel reinforcement is replaced in conjunction with fender apron panel closing.

1. Disconnect both the battery cables.
For additional information, refer to: Specifications (414-00 Battery and Charging System - General Information, Specifications).

2. Remove the front fender.
For additional information, refer to: Fender (501-02 Front End Body Panels, Removal and Installation).

3. Remove the hood latch panel.
For additional information, refer to: Hood Latch Panel (501-27 Front End Sheet Metal Repairs, Removal and Installation).

4. L/H side: Remove the battery junction box.
For additional information, refer to: Battery Junction Box (BJB) - TDV6 2.7L Diesel (418-00 Module Communications Network, Removal and Installation).

5. L/H side: Remove the power steering fluid reservoir.
For additional information, refer to: Power Steering Fluid Reservoir - TDV6 2.7L Diesel (211-02 Power Steering, Removal and Installation).

6. L/H side: Remove the battery.

7. L/H side: Remove the fuel fired booster heater.
For additional information, refer to: Fuel Fired Booster Heater (412-02B Auxiliary Heating, Removal and Installation).

8. L/H side: Remove fuel fired booster heater pipes.

9. R/H side: Remove the air cleaner.
For additional information, refer to: Air Cleaner (303-12A Intake Air Distribution and Filtering - TDV6 2.7L Diesel, Removal and Installation).

10. R/H side: Release the ABS modulator.

11. Remove the wiring harness.

12. Remove the plenum chamber panel.
For additional information, refer to: Plenum Chamber (412-01 Air Distribution and Filtering, Removal and Installation).

13. Remove the hood.

14. Remove both hood support struts.

15. Remove the hood wiring harness.

16.

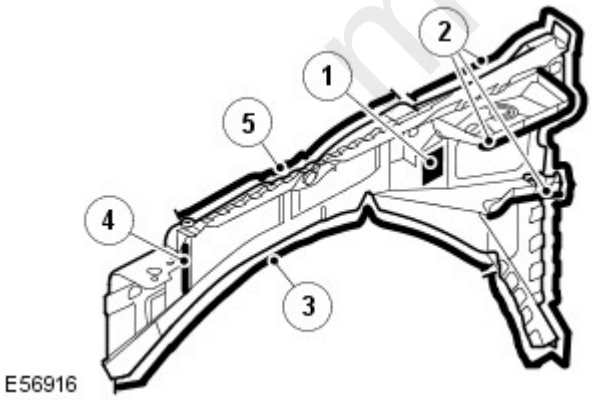

Item	Part Number	Description
1	-	Acoustic seal.
2	-	34 plug welds.
3	-	13 spot welds.
4	-	3 spot welds.
5	-	14 spot welds.

17. For additional information:

- Welding.
  For additional information, refer to: Body Repairs (501-25A Body Repairs - General Information, Description and Operation).
- Corrosion protection.
  For additional information, refer to: Corrosion Protection (501-25B Body Repairs - Corrosion Protection, Description and Operation).
- Tolerance checks.
  For additional information, refer to: Body and Frame (501-26 Body Repairs - Vehicle Specific Information and

Tolerance Checks, Description and Operation).

Installation

1. Install is the reversal of removal.

mcx30.com

Published: 11-May-2011

Front End Sheet Metal Repairs - Fender Apron Panel

Removal and Installation

Removal

1. Disconnect both the battery cables.
   For additional information, refer to: Specifications (414-00 Battery and Charging System - General Information, Specifications).
2. Remove the front fender.
   For additional information, refer to: Fender (501-02 Front End Body Panels, Removal and Installation).
3. Remove the hood latch panel.
   For additional information, refer to: Hood Latch Panel (501-27 Front End Sheet Metal Repairs, Removal and Installation).
4. Remove the radiator.
   For additional information, refer to: Radiator (303-03A Engine Cooling - TDV6 2.7L Diesel, Removal and Installation).
5. Remove the radiator coolant expansion tank.
   For additional information, refer to: Coolant Expansion Tank (303-03A Engine Cooling - TDV6 2.7L Diesel, Removal and Installation).
6. L/H side: Remove the power steering fluid reservoir.
   For additional information, refer to: Power Steering Fluid Reservoir - TDV6 2.7L Diesel (211-02 Power Steering, Removal and Installation).
7. Remove the hood.
8. Remove both hood support struts.
9. Remove the hood wiring harness.
10. Remove both wiper arms and blades.
11. Remove the plenum chamber panel.
    For additional information, refer to: Plenum Chamber (412-01 Air Distribution and Filtering, Removal and Installation).
12. L/H side: Remove the battery.
13. Remove the wiring harness
14. R/H side: Release the ABS modulator.
15. Remove the air cleaner.
    For additional information, refer to: Air Cleaner (303-12C Intake Air Distribution and Filtering - V6 4.0L Petrol, Removal and Installation).
16. Remove the insulation from outer bulkhead.
17. L/H side: Remove the fuel fired booster heater.
    For additional information, refer to: Fuel Fired Booster Heater (412-02B Auxiliary Heating, Removal and Installation).
18. L/H side: Remove the battery junction box.
    For additional information, refer to: Battery Junction Box (BJB) - TDV6 2.7L Diesel (418-00 Module Communications Network, Removal and Installation).
19.

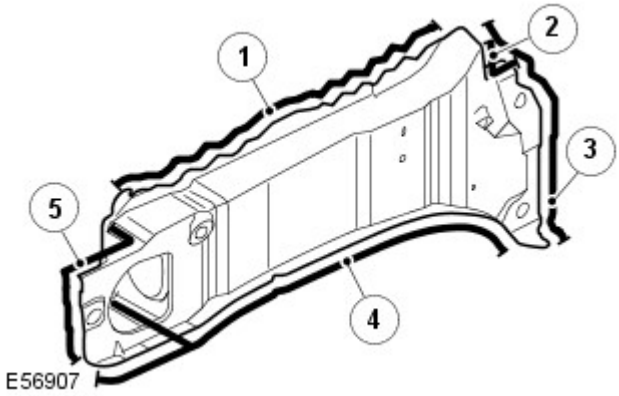

Item	Part Number	Description
1	-	14 spot-welds.
2	-	2 mig welds.
3	-	11 mig-plug welds
4	-	19 mig-plug welds.
5	-	5 mig-plug welds.

20. For additional information:
    - Welding.
      For additional information, refer to: Body Repairs (501-25A Body Repairs - General Information, Description and Operation).

mcx30.com

- Corrosion protection.
  For additional information, refer to: Corrosion Protection (501-25B Body Repairs - Corrosion Protection, Description and Operation).
- Tolerance checks.
  For additional information, refer to: Body and Frame (501-26 Body Repairs - Vehicle Specific Information and Tolerance Checks, Description and Operation).

Installation

1. Install is the reversal of removal.

mcx30.com

Published: 11-May-2011

Front End Sheet Metal Repairs - Fender Apron Panel Section

Removal and Installation

Removal

1. Disconnect both battery cables.
   For additional information, refer to: Specifications (414-00 Battery and Charging System - General Information, Specifications).
2. Remove the front fender.
   For additional information, refer to: Fender (501-02 Front End Body Panels, Removal and Installation).
3. Remove the hood latch panel.
   For additional information, refer to: Hood Latch Panel (501-27 Front End Sheet Metal Repairs, Removal and Installation).
4. Remove the radiator coolant expansion tank.
   For additional information, refer to: Coolant Expansion Tank (303-03A Engine Cooling - TDV6 2.7L Diesel, Removal and Installation).
5. L/H side: Remove the power steering fluid reservoir.
   For additional information, refer to: Power Steering Fluid Reservoir - TDV6 2.7L Diesel (211-02 Power Steering, Removal and Installation).
6. Remove the air cleaner.
   For additional information, refer to: Air Cleaner (303-12A Intake Air Distribution and Filtering - TDV6 2.7L Diesel, Removal and Installation).
7. Remove the hood.
8. Remove both hood support struts.
9. Remove the hood wiring harness.
10. L/H side: Remove the battery.
11. Remove the Wiring harness.
12. R/H side: Release the ABS modulator.
13. L/H side: Remove the fuel fired booster heater.
    For additional information, refer to: Fuel Fired Booster Heater (412-02B Auxiliary Heating, Removal and Installation).
14. L/H side: Remove the battery junction box.
    For additional information, refer to: Battery Junction Box (BJB) - TDV6 2.7L Diesel (418-00 Module Communications Network, Removal and Installation).
15.

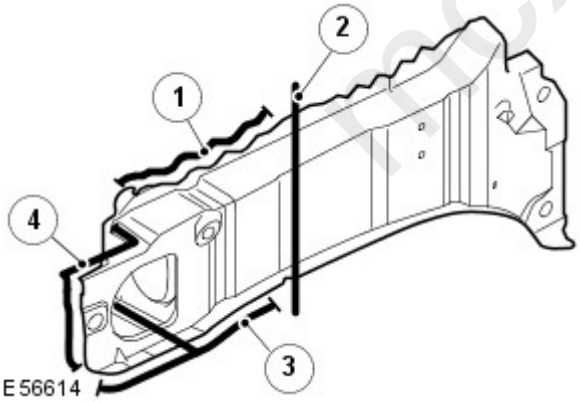

Item	Part Number	Description
1	-	5 spot-welds
2	-	Butt weld
3	-	9 mig-plug welds.
4	-	5 mig-plug welds.

16. For additional information:
    - Welding.
      For additional information, refer to: Body Repairs (501-25A Body Repairs - General Information, Description and Operation).
    - Corrosion protection.
      For additional information, refer to: Corrosion Protection (501-25B Body Repairs - Corrosion Protection, Description and Operation).
    - Tolerance checks.
      For additional information, refer to: Body and Frame (501-26 Body Repairs - Vehicle Specific Information and Tolerance Checks, Description and Operation).

Installation

1. Install is the reversal of removal.

mcx30.com

Published: 11-May-2011

Front End Sheet Metal Repairs - Front Wheelhouse

Removal and Installation

Removal

• NOTE: This procedure requires the body to be removed from the integrated body frame.

• NOTE: In this procedure the front wheelhouse is replaced in conjunction with the front side member, hood latch panel and front crossmember.

1. Disconnect both battery cables.
   For additional information, refer to: Specifications (414-00 Battery and Charging System - General Information, Specifications).
2. Remove the front side member.
   For additional information, refer to: Front Side Member (501-27 Front End Sheet Metal Repairs, Removal and Installation).
3. Remove the crossmember.
   For additional information, refer to: Front Crossmember (501-27 Front End Sheet Metal Repairs, Removal and Installation).
4. Rmove the hood latch panel.
   For additional information, refer to: Hood Latch Panel (501-27 Front End Sheet Metal Repairs, Removal and Installation).
5.

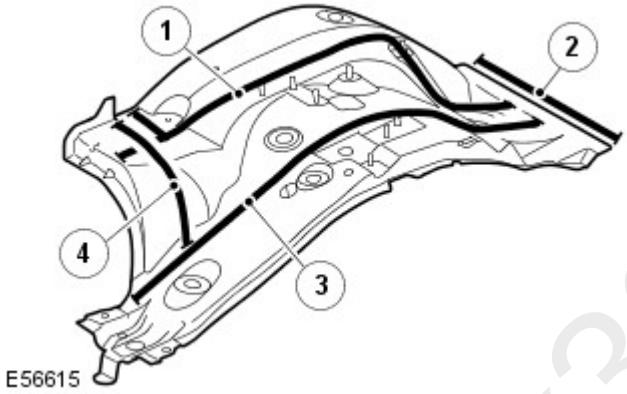

Item	Part Number	Description
1	-	19 plug welds.
2	-	9 plug welds.
3	-	18 spot welds.
4	-	7 plug welds.

6.

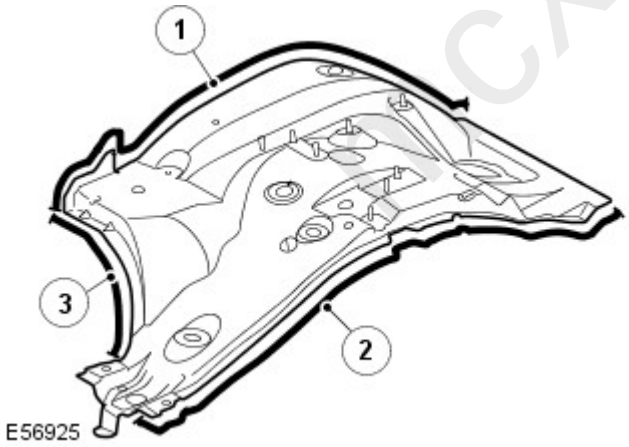

Item	Part Number	Description
1	-	13 spot welds.
2	-	16 spot welds.
3	-	9 spot welds.

7. For additional information:
   - Welding.
     For additional information, refer to: Body Repairs (501-25A Body Repairs - General Information, Description and Operation).
   - Corrosion protection.
     For additional information, refer to: Corrosion Protection (501-25B Body Repairs - Corrosion Protection, Description and Operation).
   - Tolerance checks.
     For additional information, refer to: Body and Frame (501-26 Body Repairs - Vehicle Specific Information and Tolerance Checks, Description and Operation).

mcx30.com

Installation

1. Install is the reversal of removal.

mcx30.com

Published: 11-May-2011

Front End Sheet Metal Repairs - Front Wheelhouse Reinforcement

Removal and Installation

Removal

• NOTE: In this procedure the front wheelhouse reinforcement is replaced in conjunction with the front side member and front wheelhouse.

1. Disconnect both battery cables.
   For additional information, refer to: Specifications (414-00 Battery and Charging System - General Information, Specifications).
2. Remove the front side member.
   For additional information, refer to: Front Side Member (501-27 Front End Sheet Metal Repairs, Removal and Installation).
3. Remove the front wheelhouse.
   For additional information, refer to: Front Wheelhouse (501-27 Front End Sheet Metal Repairs, Removal and Installation).
4.

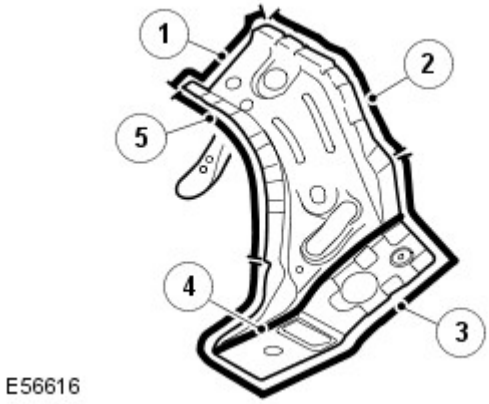

Item	Part Number	Description
1	-	4 spot welds.
2	-	7 plug welds.
3, 4	-	20 plug welds.
5	-	9 spot welds.

5. For additional information:
   - Welding.
     For additional information, refer to: Body Repairs (501-25A Body Repairs - General Information, Description and Operation).
   - Corrosion protection.
     For additional information, refer to: Corrosion Protection (501-25B Body Repairs - Corrosion Protection, Description and Operation).
   - Tolerance checks.
     For additional information, refer to: Body and Frame (501-26 Body Repairs - Vehicle Specific Information and Tolerance Checks, Description and Operation).

Installation

1. Install is the reversal of removal.

mcx30.com

Published: 11-May-2011

Front End Sheet Metal Repairs - Front Wheelhouse Section

Removal and Installation

Removal

• NOTE: This procedure requires the body to be removed from the integrated body frame.

• NOTE: In this procedure the front wheelhouse section is replaced in conjunction with the front side member section, front wheelhouse reinforcement, hood latch panel and front crossmember.

1. Disconnect both battery cables.
   For additional information, refer to: Specifications (414-00 Battery and Charging System - General Information, Specifications).
2. Remove the front side member section.
   For additional information, refer to: Front Side Member Section (501-27 Front End Sheet Metal Repairs, Removal and Installation).
3. Remove the front wheelhouse reinforcement.
   For additional information, refer to: Front Wheelhouse Reinforcement (501-27 Front End Sheet Metal Repairs, Removal and Installation).
4. Remove the crossmember.
   For additional information, refer to: Front Crossmember (501-27 Front End Sheet Metal Repairs, Removal and Installation).
5. Remove the hood latch panel.
   For additional information, refer to: Hood Latch Panel (501-27 Front End Sheet Metal Repairs, Removal and Installation).
6.

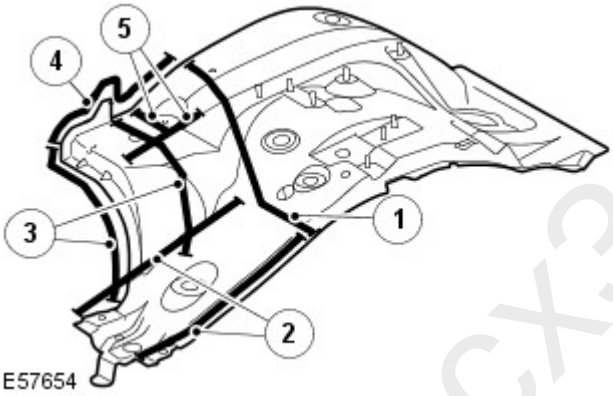

Item	Part Number	Description
1	-	Butt weld
2	-	15 spot welds.
3	-	7 plug welds, 9 spot welds.
4	-	20 spot welds.
5	-	9 plug welds.

7. For additional information:
   - Welding.
     For additional information, refer to: Body Repairs (501-25A Body Repairs - General Information, Description and Operation).
   - Corrosion protection.
     For additional information, refer to: Corrosion Protection (501-25B Body Repairs - Corrosion Protection, Description and Operation).
   - Tolerance checks.
     For additional information, refer to: Body and Frame (501-26 Body Repairs - Vehicle Specific Information and Tolerance Checks, Description and Operation).

Installation

1. Install is the reversal of removal.

mcx30.com

Published: 11-May-2011

Front End Sheet Metal Repairs - Fender Apron Panel Closing Panel

Removal and Installation

Removal

• NOTE: In this procedure the fender apron closing panel is replaced in conjunction with the fender apron panel or the fender apron panel reinforcement.

1. Disconnect both battery cables.
   For additional information, refer to: Specifications (414-00 Battery and Charging System - General Information, Specifications).
2. Remove the fender apron panel.
   For additional information, refer to: Fender Apron Panel (501-27 Front End Sheet Metal Repairs, Removal and Installation).
3. Remove the fender apron panel reinforcement.
   For additional information, refer to: Fender Apron Panel Reinforcement (501-27 Front End Sheet Metal Repairs, Removal and Installation).
4.

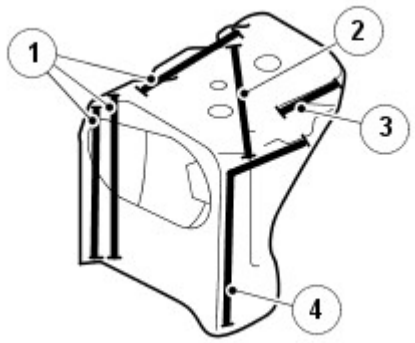

E56612

Item	Part Number	Description
1	-	7 plug welds.
2	-	2 spot welds.
3	-	2 spot welds.
4	-	5 plug welds.

5. For additional information:
   - Welding.
     For additional information, refer to: Body Repairs (501-25A Body Repairs - General Information, Description and Operation).
   - Corrosion protection.
     For additional information, refer to: Corrosion Protection (501-25B Body Repairs - Corrosion Protection, Description and Operation).
   - Tolerance checks.
     For additional information, refer to: Body and Frame (501-26 Body Repairs - Vehicle Specific Information and Tolerance Checks, Description and Operation).

Installation

1. Install is the reversal of removal.

mcx30.com

Published: 11-May-2011

Front End Sheet Metal Repairs - Fender Apron Panel Reinforcement Front Section

Removal and Installation

Removal

• NOTE: In this procedure the fender apron panel reinforcement front section is replaced in conjunction with fender apron panel closing.

1. Disconnect both the battery cables.
   For additional information, refer to: Specifications (414-00 Battery and Charging System - General Information, Specifications).
2. Remove the front fender.
   For additional information, refer to: Fender (501-02 Front End Body Panels, Removal and Installation).
3. Remove the hood latch panel.
   For additional information, refer to: Hood Latch Panel (501-27 Front End Sheet Metal Repairs, Removal and Installation).
4. L/H side: Remove the battery junction box.
   For additional information, refer to: Battery Junction Box (BJB) - TDV6 2.7L Diesel (418-00 Module Communications Network, Removal and Installation).
5. L/H side: Remove the radiator coolant expansion tank.
   For additional information, refer to: Coolant Expansion Tank (303-03C Engine Cooling - V6 4.0L Petrol, Removal and Installation).
6. L/H side: Remove the power steering fluid reservoir.
   For additional information, refer to: Power Steering Fluid Reservoir - TDV6 2.7L Diesel (211-02 Power Steering, Removal and Installation).
7. L/H side: Remove the battery.
8. L/H side: Remove the fuel fired booster heater.
   For additional information, refer to: Fuel Fired Booster Heater (412-02B Auxiliary Heating, Removal and Installation).
9. L/H side: Remove fuel fired booster heater pipes.
10. R/H side: Release the ABS modulator.
11. Remove the wiring harness.
12. Remove the hood.
13. Remove both hood support struts.
14. Remove the hood wiring harness.
15.

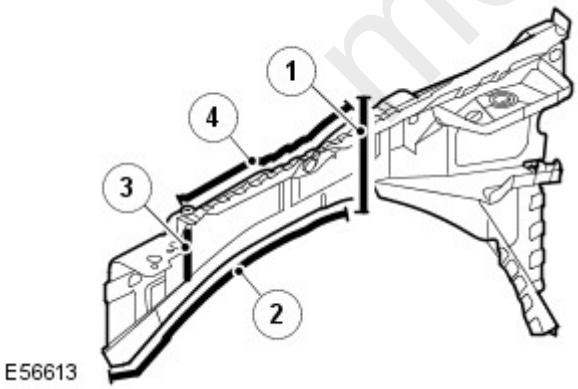

Item	Part Number	Description
1	-	Butt weld.
2	-	20 spot welds.
3	-	3 spot welds.
4	-	11 spot welds.

16. For additional information:
    - Welding.
      For additional information, refer to: Body Repairs (501-25A Body Repairs - General Information, Description and Operation).
    - Corrosion protection.
      For additional information, refer to: Corrosion Protection (501-25B Body Repairs - Corrosion Protection, Description and Operation).
    - Tolerance checks.
      For additional information, refer to: Body and Frame (501-26 Body Repairs - Vehicle Specific Information and Tolerance Checks, Description and Operation).

Installation

1. Install in the reversal of removal.

Published: 11-May-2011

Front End Sheet Metal Repairs - Fender Apron Panel Reinforcement Rear Section

Removal and Installation

Removal

1. Disconnect both the battery cables.
   For additional information, refer to: Specifications (414-00 Battery and Charging System - General Information, Specifications).
2. Remove the front fender.
   For additional information, refer to: Fender (501-02 Front End Body Panels, Removal and Installation).
3. L/H side: Remove the battery junction box.
   For additional information, refer to: Battery Junction Box (BJB) - TDV6 2.7L Diesel (418-00 Module Communications Network, Removal and Installation).
4. L/H side: Remove the battery.
5. R/H side: Remove the air cleaner.
   For additional information, refer to: Air Cleaner (303-12A Intake Air Distribution and Filtering - TDV6 2.7L Diesel, Removal and Installation).
6. R/H side: Release the ABS modulator.
7. Remove the wiring harness.
8. Remove the plenum chamber panel.
   For additional information, refer to: Plenum Chamber (412-01 Air Distribution and Filtering, Removal and Installation).
9. Remove the hood.
10. Remove both hood support struts.
11. Remove the hood wiring harness.
12.

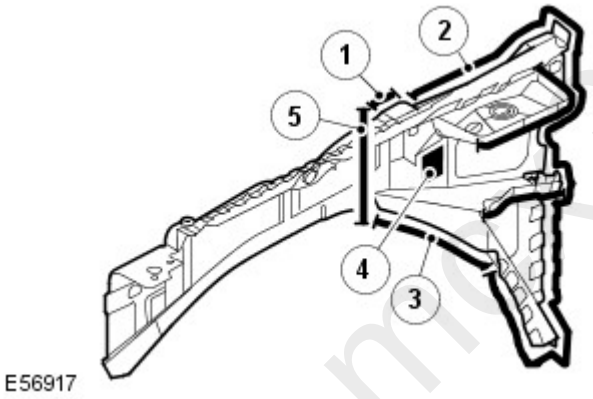

Item	Part Number	Description
1	-	3 spot welds.
2	-	34 plug welds.
3	-	7 spot welds.
4	-	Acoustic seal.
5	-	Butt weld.

13. For additional information:
    - Welding.
      For additional information, refer to: Body Repairs (501-25A Body Repairs - General Information, Description and Operation).
    - Corrosion protection.
      For additional information, refer to: Corrosion Protection (501-25B Body Repairs - Corrosion Protection, Description and Operation).
    - Tolerance checks.
      For additional information, refer to: Body and Frame (501-26 Body Repairs - Vehicle Specific Information and Tolerance Checks, Description and Operation).

Installation

1. Install is the reversal of removal.